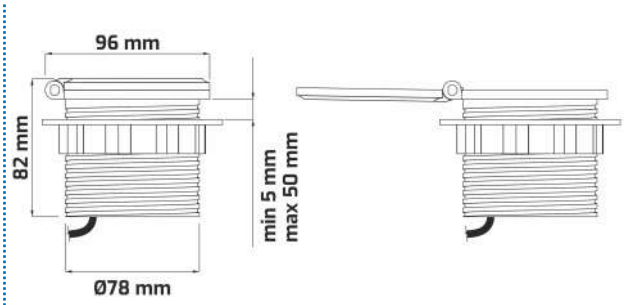TecLines
telligent